Innovative Use of Screw Press Filtration in Tailings Dewatering Plant Design

V J Absolon[1] and D Nieuwkerk[2]

ABSTRACT

Screw press technology is an innovative approach to tackling the growing pressure to conserve water and minimise the environmental impact of mineral tailings disposal. The principles of the technology have been known for a considerable period of time in non-mining applications such as water treatment, wastewater (municipal sludge), as well as in the paper and chemical industries for dewatering solids, particularly those containing clays.

The screw press represents a viable niche technology for filtering fine and high-clay tailings, without the prior thickening stage, and is capable of producing a filtered product that is sufficiently consolidated and dry enough to provide a product suitable for conveying and dry stacking.

The Ishigaki screw press was introduced in 1990 and key features are:

- continuous operation and excellent availability
- low wear to plant
- acceptable flocculant consumption
- low carbon footprint and low noise levels
- fully automatic.

These features lead to simpler plant layouts, easier maintenance, smaller spares inventories, reduced wear, smaller footprint and overall lower capital and operating costs.

The amenability of a particular tailing stream to treatment by screw press technology may be determined by test work. Two pilot plant studies are described where this technology has been applied in the mineral industry being flotation tailings from a rare earth (RE) mineral concentrator and coal tailings. In addition, preliminary details are given of an ACARP sponsored research program titled 'The application of screw press filtration in tailings dewatering'.

INTRODUCTION AND BACKGROUND

The screw press has origins going back to Roman times when the primary use was in the production of wine and olive oil. Today the screw press is used in a wide variety of liquid-solid separation, dewatering and other applications. Screw presses may be used for the same applications where belt presses, decanter centrifuges and filter presses are used. Examples of such use are in the pulp and paper industry for dewatering, municipal bio-solids dewatering, seepage and grease trap sludge, food processing and agriculture for both extraction and diffusion, fish industry to separate oil and meal, dredged sediment and sludge dewatering and in the chemicals and minerals industries for mechanical pressing and compounding.

The Ishigaki screw press was introduced to the water treatment industry in 1990 and has been progressively applied to wastewater as well as the paper and chemical industries for dewatering ultra-fine solids, particularly those containing clays. The Ishigaki screw press is a pressing rotary type screw press specifically designed for dewatering. Ishigaki Oceania has supplied several screw presses to the wastewater industry in Australia and is actively seeking opportunities in the minerals industry for this technology.

Minerals tailings dewatering is a potential application for the screw press as an alternative to the traditional tailings disposal via thickener to tailings dam. There is a considerable incentive to develop systems which eliminate ponds, reduce the containment in dams and significantly decrease the water being sent to the tailings dam. Some of the advantages of this include reduction in risks of environmental and structural failure and the direct recovery and recycling of water to the process, (Grabinsky, Theriault and Welch, 2002). There is a tailings disposal continuum from tailings facilities developed to store tailings slurry that arrives at the facility with solids contents ranging from 25 per cent to 60 per cent, depending upon whether thickening is carried out prior to deposition, through surface paste facilities to filtered dry stacked tailings (Davies, 2011). The role of flocculants and electrolytes in tailings dewatering is significant and has been the subject of studies in the dewatering of coal plant tailings (Alam *et al*, 2011; Dueck, Purevjay and Neesse, 2014; Ofori *et al*, 2012). Conventional tailings facilities remain the best alternative for the majority of operating and developing mines around the world. However, there are a minority set of projects that benefit from a non-slurry alternative to achieve optimal

1. FAusIMM(CP), Consulting Metallurgist, Absol Pty Ltd, PO Box 3018, Unley SA 5061. Email: vic@ishigaki.com.au

2. Marketing and Sales – Screw Presses, Ishigaki Oceania, PO Box 1727, Malaga WA 6944. Email: dirk@ishigaki.com.au

permitting and efficient recycling of water. The filtered dry stacked end of the tailings disposal continuum is facilitated by the development of high-capacity vacuum and pressure filtration and the screw press could find a place in this continuum between paste and filtered dry stacked disposal with the advantage of lower capital, maintenance and operating costs.

Conceptual flow sheets using screw press technology involve direct substitution of the thickener with the screw press filtration of fine tailings, followed by clarification of the filtrate or a combination of hydrocyclone de-sliming and screw press filtration of slimes, followed by clarification of the filtrate.

SCREW PRESS DESCRIPTION

The screw press is totally enclosed in a housing to minimise escape of aerosols and the housing has hinged windows through which the operation can be inspected. Alternatively, it can be fitted with sight glasses for visual access. A cut away diagram of the screw press in shown in Figure 1.

In principle, screw press technology uses a coarse screw to convert the rotation of a drive wheel into a movement of greater force. The body of the screw press is constructed of bars which hold and support a screen with very fine apertures, which surrounds the screw assembly and is of a constant diameter from feed end to discharge. The screw is full-length with flights of increasing pitch assembled on cones of increasing diameter, resulting in the cross-sectional volume decreasing in the direction of the flow. As product moves through the press, the decrease in pitch and increase in cone diameter exert greater pressure on the material being processed. A typical schematic of the perforated screen for biological wastewater is shown in Figure 2.

The screw press operates with feed slurry which is premixed with appropriate quantities of suitable flocculant or coagulant to enable large flocs to form. This flocculated slurry is then pumped into the open end of the press where the screw is narrowest and the screen holes are largest. This is the thickening region of the press, and on correctly designed

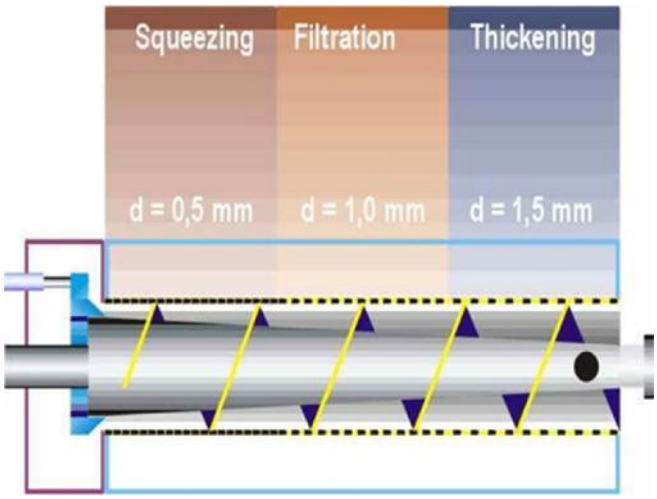

FIG 2 – Screw press perforated screen arrangement.

presses, eliminates the need for thickening altogether. The next section is a low pressure filtration region in which the free water continues to drain.

In the final squeezing section, the pressure increases and this allows for the rest of the free water and some of the so-called 'interstitial water' to be drained. At the discharge end of the screw, a conical pressure plate restricts the discharge of the filter cake, by applying a back pressure that enhances the dewatering of the cake. A small annulus between the screen and the conical pressure plate allows the dewatered cake to escape.

A pressure profile across the thickening, filtration and squeezing zones is shown in Figure 3. A typical process flow sheet is shown in Figure 4.

The Ishigaki screw press is available in diameter from 0.4 to 1.5 m and corresponding lengths from 1 to 14 m. An efficient AC induction motor is directly coupled to a torque multiplying gearbox driving the screw. A solid state inverter

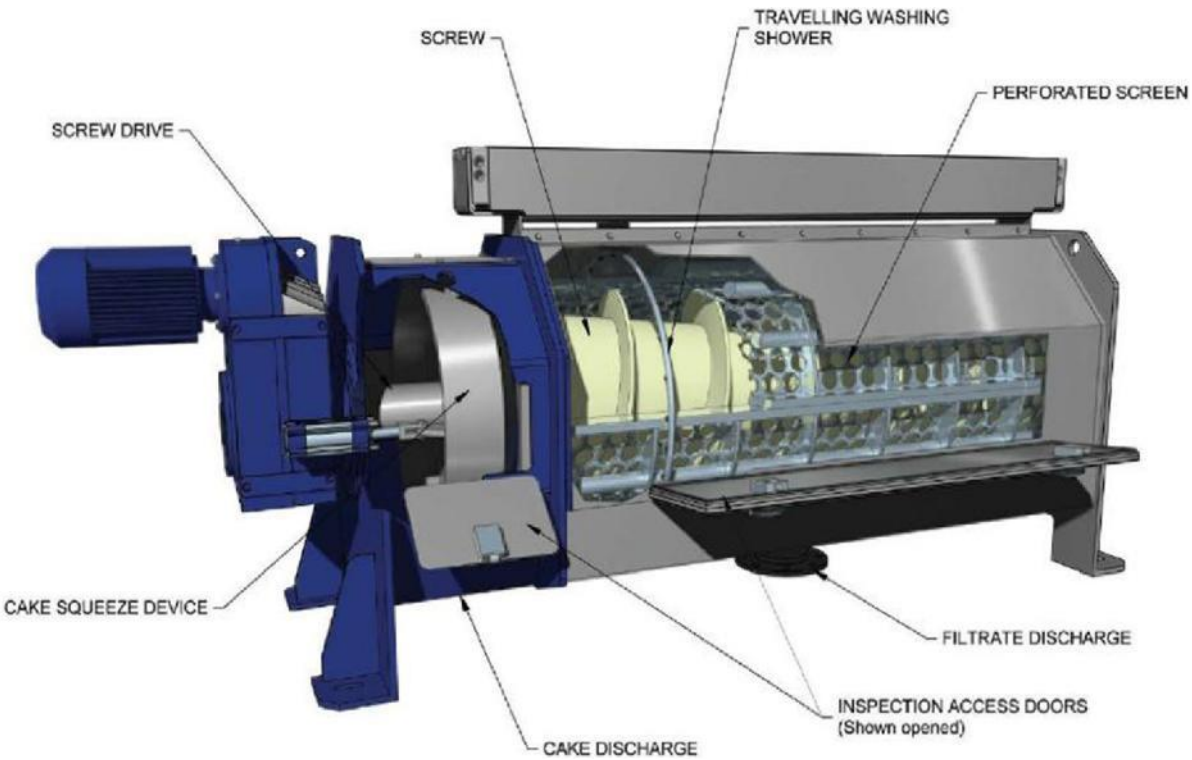

FIG 1 – Screw press mechanical design.

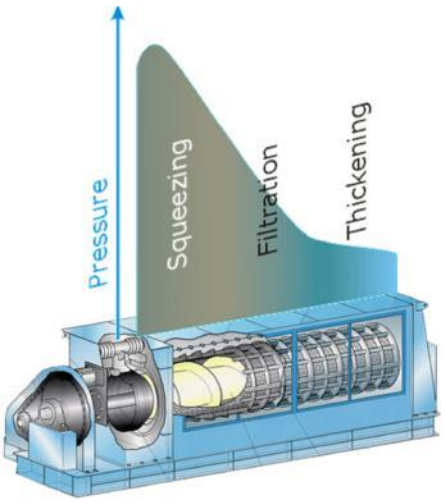

FIG 3 – Screw press pressure zones.

transforms the fixed cycle three phase power to a variable frequency that controls the rev/min of the electric motor and built-in electronic load protection prevents damage to the drive train. This system is capable of adjusting to different feed conditions and with screw press speed varying from 0.1 to 1.0 rev/min in biological wastewater treatment and up to 5.0 rev/min in tailings treatment.

When compared with other types of filtration, the screw press has a number of advantages:

- simplicity and low maintenance costs as a result of fewer moving parts and no requirement for fabric filter cloth
- continuous operation
- low power requirement
- stable operation over a range of process feed variation
- low shearing of flocculated solids, thus preserving floc structure
- higher cake solid concentrations when compared to a belt filter press.

Disadvantages include:

- significant usage of flocculant/coagulant; in range 8–12 kg/t dry solids
- some applications require a secondary clarification of filtrate and the recycle of solids, up to 20 per cent feed, to screw press feed.

FLOTATION TAILINGS FROM RARE EARTH MINERAL CONCENTRATOR

A pilot plant program has been conducted to determine the amenability of the Ishigaki screw press to dewater the flotation tailings generated at the Mt Weld rare earth (RE) bearing mineral concentrator. The flotation tailings are approximately ten per cent solids and this operation is investigating options to increase the solids density of this stream and recover water for reuse in the concentrator. The pilot plant program was conducted as part of their investigation.

The pilot plant program followed bench top work and initial screw press testing which demonstrated the ability of the screw press to achieve a filter cake with greater than 50 per cent solids and simultaneously produce a clear filtrate.

The Ishigaki screw press skid mounted test unit used in this test work is shown below in Figure 5.

FIG 5 – Screw press test unit at Mt Weld site.

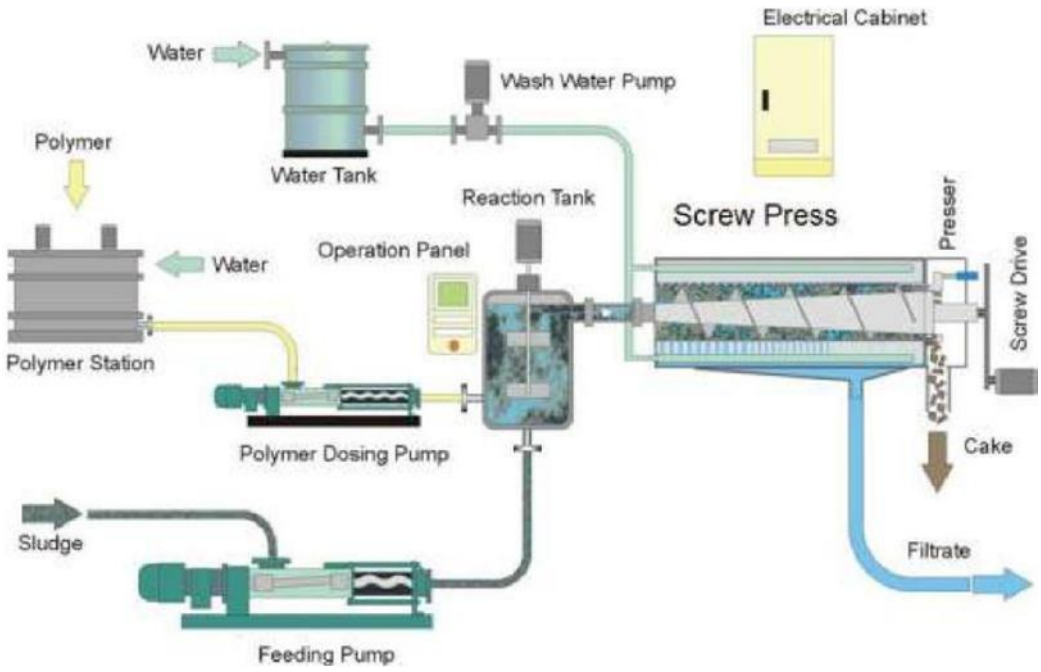

FIG 4 – Screw press typical process flow sheet.

A simplified flow sheet for the pilot plant operation is shown below in Figure 6.

Flow sheet description: tailings were diverted from the plant tailings hopper, upstream of the plant tailings pump, into an agitated feed tank. Coagulant addition points were arranged to deliver either to the feed tank or to the feed tank discharge upstream of the screw press feed pump. The feed pump delivered the feed pulp to two upflow conditioning tanks arranged in series. Flocculant was injected into the tailings stream to the first and second conditioner. The second conditioner overflowed to the screw press inlet with the screw press solids collected in a wheelbarrow and the filtrate being passed to a thickener. Thickener overflow was clear solution and returned to the water circuit and the thickener underflow was recycled to the feed tank.

The coagulant (Magnafloc 1425) concentrate (45 per cent active) was diluted to ten per cent. The flocculant (Magnafloc 10) was in powder form and required at least four hour hydration to achieve activation. This was mixed to 0.5 per cent strength.

The best results were achieved in a control test (refer Table 1), with the dosing of the coagulant just before the feed pump and the dosing of the flocculant into the base of the conditioning tank, along with ~10 per cent recycle of the filtrate and the solids in the filtrate.

It was also established that a clarifier is required to further process the filtrate to capture and recycle underflow solids into the screw press feed.

Typical cake discharge from the screw press is shown in Figure 7 and typical filtrate from the screw press is shown in Figure 8.

The trial work proved that the screw press performed well on the tailings slurry available for the trial. The objectives of the test campaign were accomplished as follows (unit design details are shown in Table 2):

- a steady state operation was achievable over a range of feed conditions
- assessment of the throughput capacity of the screw press
- final cake solids greater than 60 per cent dry solids
- production of a relatively clear filtrate that can be handled by down steam equipment

TABLE 1

Summary of results from control test.

Parameter	Control test
Total feed solids mass flow	94.5
Feed solids % w/w	10.5
Feed size p80 µm	13.8
Coagulant kg/t solids	6.6
Flocculant kg/t solids	0.9
Cake solids % w/w†	62.4
Filtrate solids % w/w	18.3
First pass solids capture to	74.2

- established reagent usage rates
- process variations were accounted for
- established likely first pass solids capture to screw press cake (80 per cent) and identified methods best suited to process solids bypassed to filtrate.

COAL TAILINGS

In the Australian coal industry, the mechanical dewatering of tailings has been carried out using the following technologies:

- belt press filters
- recess plate pressure filters
- vacuum belt filters
- centrifuges.

A pilot plant program was conducted to assess the performance of the screw press in comparison with a pressure filter for tailings from an eastern states coal project. The tailings were extremely fine and contained swelling clays.

The test work was conducted off-site on four different feed samples. The objective of the test program was to simulate the on-site treatment process. The on-site treatment process included a chemical dosing regime. Performance was evaluated by comparing throughput, filterability, cake thickness and cake characteristics.

The pressure filter used was a Lasta MC Pilot filters press MC360 using two chambers (refer Figure 9). A low pressure

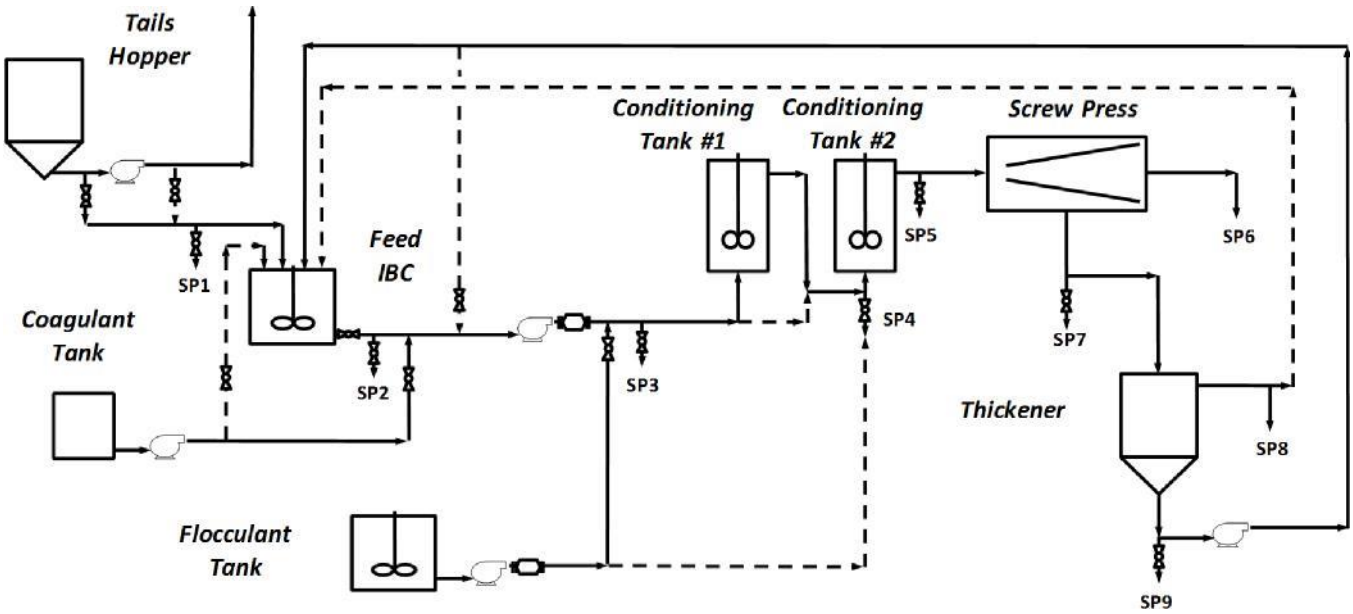

FIG 6 – Flow sheet for test program.

FIG 7 – Screw press cake discharge.

FIG 8 – Screw press filtrate.

TABLE 2
Screw press test unit design details

Model	ISGK 0205
Screen diameter	200 mm
Motor	2.2 kW
Conditioning tank volume	50 L
Screw speed	0.5 rev/min

compressor, 7 bar, was used to supply air to an air pressured feed tank and air for cake and core blow. A separate high pressure compressor was used to provide pressure 5, 8, 15 and 20 bar to the squeezing diaphragms.

The test schematic for the Lasta MC s shown in Figure 10 and the technical data is shown in Table 3.

The test schematic for the screw press was similar to that shown in Figure 6.

The test work was supported by laboratory bench testing and included testing a range of polymers from several suppliers and various chemical treatment regimes prior to filtration.

FIG 9 – Lasta MC pilot filter press MC 360.

The test work on the coal tailings was not conclusive or repeatable and neither the pressure filtration with cake moisture contents in the range 20 to 44 per cent solids w/w (21 tests) nor screw press filtration with cake moisture contents in the range 41 to 47 per cent solids w/w (three tests) delivered a dry enough cake to allow effective handling in a landfill environment, ie target moisture content greater than 62 per cent solids w/w.

The test work program highlighted the importance of understanding the behaviour of coagulants and flocculants as well as the pulp chemistry of the tailings, the variability and limitations of conducting screw press testing on small samples which do not allow for flexibility in testing variables and the achievement of steady state operation.

ACARP PROPOSAL–THE APPLICATION OF SCREW PRESS FILTRATION TO TAILINGS DEWATERING

A proposal for research funding from the Australian Coal Association Research Program (ACARP) has been submitted by Mechanical Advantage Pty Ltd, University of Queensland and Ishigaki Oceania Pty Ltd for a research project with the title 'The application of screw press filtration to tailings dewatering'.

TABLE 3
Lasta MC 360 – technical data

Hydraulic closing pressure:	200 bar
Filter plates:	polypropylene (1 recess head plate;
Diaphragm	natural rubber
Number of chambers	2
Free filter area total	0.208
Filter cake thickness	40 mm test 1–14
Volume total: (40 mm cake)	3.5 L
Filter cloths	Ishigaki Standard IP182
Material	polypropylene
Configuration of line	multifilament + monofilament
Thickness	1.80 mm
Air permeability	1000 $cm^3/min/cm^2$

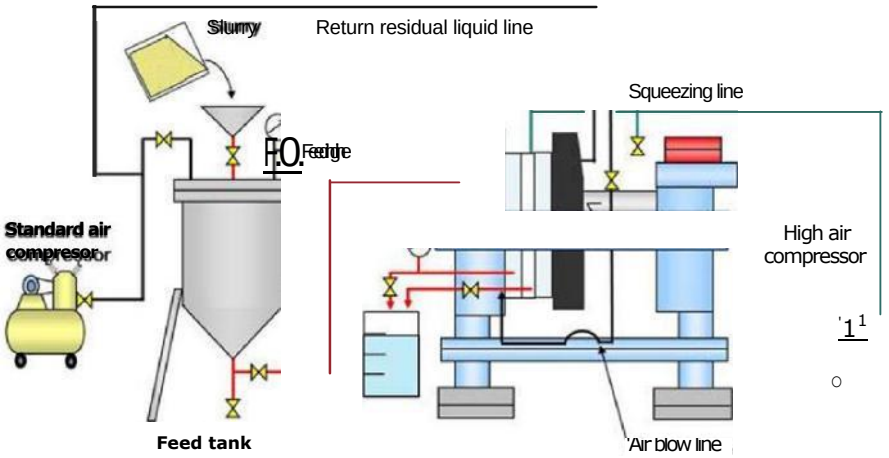

FIG10 - Lasta MC 360 test schematic.

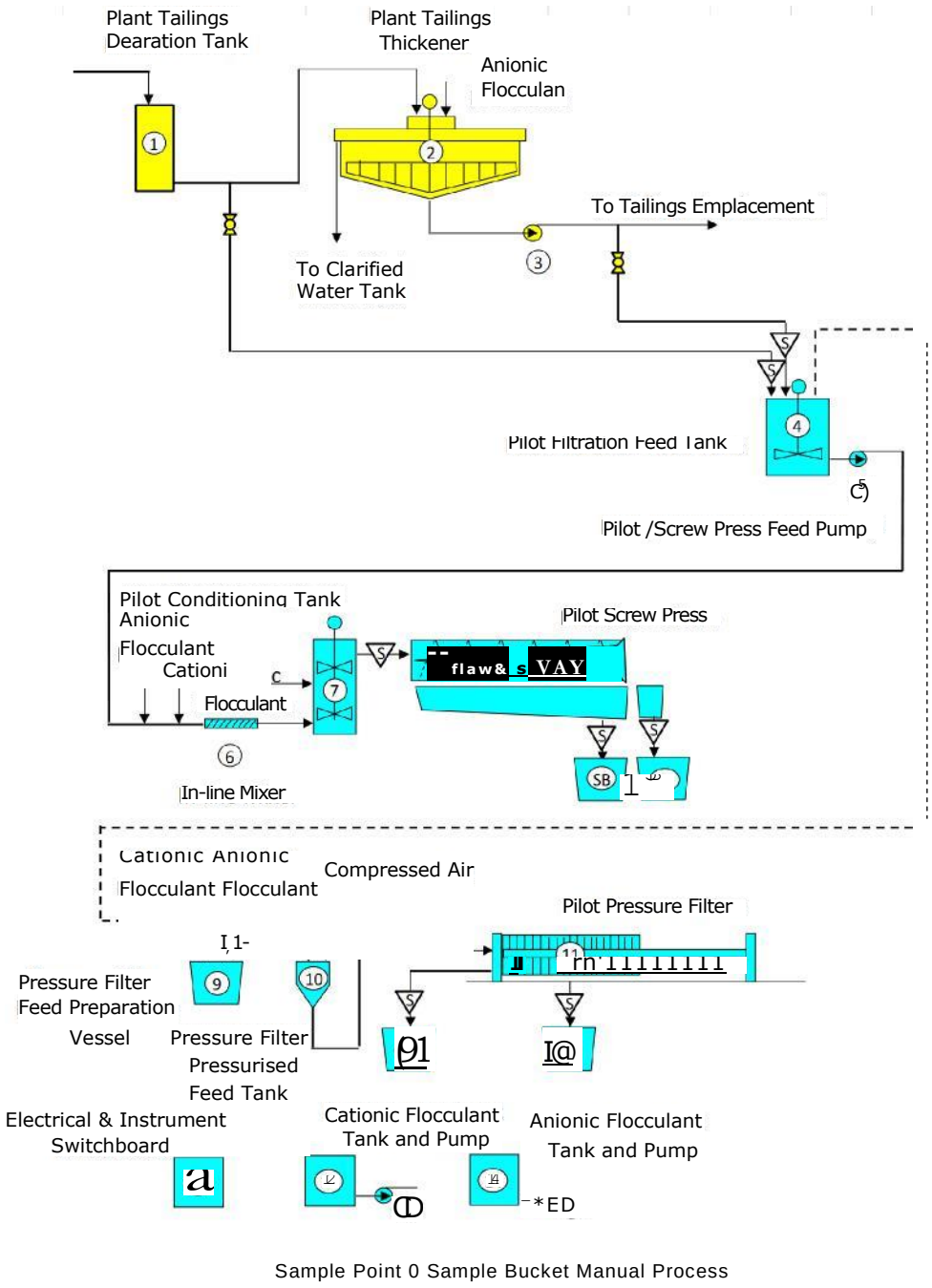

FIG11 — Proposed pilot plant schematic.

This project will involve a single operating mine that has an interest in dry tailings disposal in a field pilot trial at the beneficiation plant of the mine.

The program envisages initial sampling of dilution strata and tailings in order to characterise those materials and bench scale flocculation and filtration tests. This will be followed by an extended pilot trial in the field, sample collection and analysis, and finally reporting. The planned duration of the project is 24 months.

The filtration trials will include the trial of a pilot pressure filter as well as the screw press in order to provide a comparison of the two technologies. The filtration equipment will be supplied by Ishigaki Oceania Pty Ltd. The proposed pilot plant flow sheet is shown in Figure 11.

CONCLUSIONS

The screw press is a promising technology for the treatment of mineral tailings and mineral process sludges. The pilot plant studies described above have demonstrated the potential for the technology with successful application in dewatering of flotation tailings from a RE mineral concentrator. Further development work in the treatment of coal tailings is in progress.

ACKNOWLEDGEMENTS

The authors thank Lorin Sole, Lukas Wimmler and Wilfried Wimmler for their efforts in conducting the various pilot test work reported in this paper. The support of Lynas Corporation, Mechanical Advantage, University of Queensland and Ishigaki Oceania is gratefully acknowledged.

This paper is published by kind permission of Lynas Corporation, Mechanical Advantage, University of Queensland and Ishigaki Oceania.

REFERENCES

Alam, N, Ozdemir, O, Hampton, M A and Nguyen, A V, 2011. Dewatering of coal plant tailings: flocculation followed by filtration, *Fuel*, 90(1):26–35.

Davies, M, 2011. Filtered dry stacked tailings; the fundamentals, in *Proceedings Tailings and Mine Waste 2011*, 9 p (Balkema).

Dueck, J, Purevjav, D and Neesse, T, 2014. Surface force effect on filter cake characteristics [online], Filtration Solutions. Available from: <http://homepage.ntlworld.com/steve.tarleton/TransactionsExample.pdf>.

Grabinsky, M, Theriault, J and Welch, D, 2002. An overview of paste and thickened paste tailings disposal on surface, in *Proceedings Symposium 2002 on Environment and Mine,* 533 p (Canadian Institute of Mining, Metallurgy and Petroleum: Montreal).

Ofori, P, Nguyen, A V, Firth, B, McNally, C and Hampton, M A, 2012. The role of surface interaction forces and mixing in enhanced dewatering of coal preparation tailings, *Fuel,* 97:262–268.